IMMOBILISER RELAY

Starter Disable

The starter disable feature is perhaps one of the most important parts of any security system. It ensures that, if a thief does manage to force their way into your vehicle, they won't be able to drive it away.

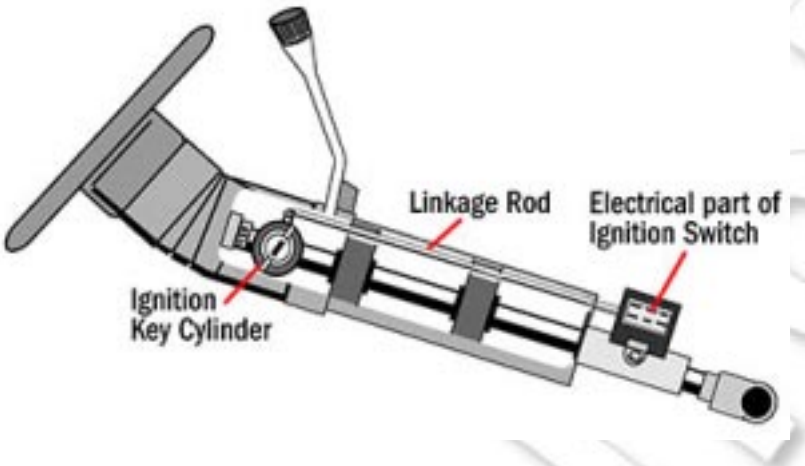

To connect the starter disable feature, you'll need to tap into your ignition system. Some cars allow you to do this by plugging into a central relay box, but others require you to splice into the wire.

1. The starter interrupt is a relay which ties in between the ignition switch and the starter solenoid. The starter solenoid main power feed draws a huge amount of current, so the solenoid feed wire going to the starter cannot be spliced into. The wire that you tie into is the small wire going to the starter solenoid that tells the solenoid to energize when you turn your key to the "start" position. (not to be confused with the ignition wire).

2. Test the wires at the steering column to find the one that reads 12 volts only when the starter is cranking (not while the engine is running). Following the instructions supplied with the alarm, splice the starter disable wire (or outboard relay) into this wire.

Wiring Diagram

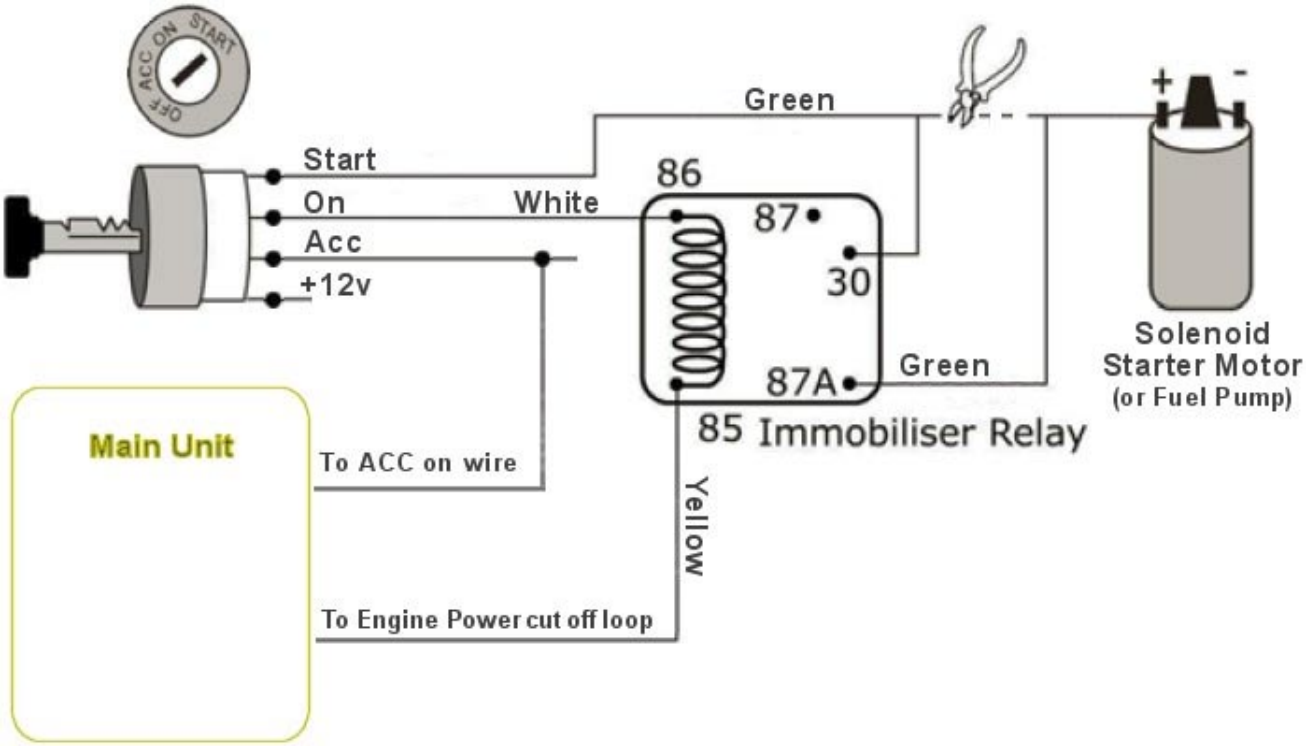

Immobiliser Relay - position/connection

- The immobiliser relay should be ran away from the steering column and should not be easily visible upon removing the under dash panel.
- Solid wire connections must be made. For maximum dependability, solder and shrink tube the connections.
- Wires should be wrapped in electrical tape or plastic tubing to match the factory wiring.
- Connect Pin 85 of the immobiliser relay (white wire) to the vehicles ignition ON wire.
- Connect Pin 86 of the immobiliser relay (yellow wire) to the alarms immobiliser output wire.
- The two green wires are the immobilisation circuit. Locate the wire on the vehicle that you want to interrupt eg. the starter wire or fuel pump wire and cut it. Connect a green wire to either side of the cut wire.

Starter Wire: START

- Connect to a wire that is at +12V when the ignition key is in the engine cranking position
- The starter wire provides 12V directly to the starter or a relay controlling the starter.
- The starter wire is often found in the harness coming from the key cylinder.

To find the starter wire with your multi-meter:

1. Set your meter to DC voltage.
2. Attach the (-) probe to chassis ground.
3. Probe the wire you suspect of being the starter wire with the (+) probe.
4. Turn the key to the start position. If the meter reads 12V go to the next step.
5. Cut the wire you suspect of being the starter wire.
6. Attempt to start the car. If the starter engages, reconnect it and go back to step 3. If the starter does not engage, that is the correct wire.

12V Accessory Wire: ACC

- Connect the system's ACC wire (Main unit) to a wire that is at +12V when ignition is in ACC or ON position but is 0V during engine cranking.
- This wire powers the vehicle's heating / air conditioning system.
- This wire will not show 12V during the cranking cycle.
- Most often found in the harness coming from the key cylinder.

To find 12V accessory with a multi-meter:

1. Set meter to DC voltage.
2. Attach the (-) probe of the meter to chassis ground.
3. Probe the wire you suspect of being the accessory wire with the (+) probe. The steering column harness or ignition harness is an excellent place to find this wire.
4. Turn the ignition key to the accessory and then the run position. If your meter reads 12V on each, go to the next step.
5. Turn the key to the start position. The meter should drop to zero. If it does, this is the correct wire.

12V Ignition ON Wire: ON

- Connect the system's ignition ON wire to a wire that is at +12V whenever the ignition key is on (in any position including engine cranking)
- The ignition wire is often found in the harness coming from the key cylinder.
- This wire is powered when the key is in the run or start position.
- This wire powers the ignition system and the fuel delivery system.

To find 12V ignition with a multi-meter:

1. Set meter to DC voltage.
2. Attach the (-) probe of the meter to chassis ground.
3. Probe the wire you suspect of being the ignition wire with the (+) probe. The steering column harness or ignition harness is an excellent place to find this wire.
4. Turn the ignition key to the run position. If your meter reads 12V go to the next step.
5. Turn the key to the start position. The meter should remain steady. If it drops close to or all the way to zero, that is not the correct wire. Go back to step 3. If it stays steady at 12V that is the ignition wire.