BOOT RELEASE - TRUNK

Boot Release Wire: Trunk Release Output

Some cars have an electric boot release or one can be added. This can be interfaced with our alarms systems or Remote Keyless that have separate channels to control a boot release. For cars with a built in boot release the wire is found at the keyless entry module under the dash or behind a kick panel.

To find the boot release trigger wire with your multi-meter:
1. Set to DC voltage.
2. Attach the (-) probe to Chassis Ground.
3. Probe the wire you suspect of being the boot release trigger wire with the (+) lead.
4. The meter should indicate 12V with the boot release button depressed if you have found the correct wire.
5. The meter will then read 0V when the boot release button is at rest.

NOTE! Never connect an alarms boot release trigger output directly to the boot release wire. The boot release trigger outputs from almost all alarm systems are low-current outputs. Connecting directly to the boot release wire without a relay could cause the unit to fail.

Trunk Release Types: (+)Positive OR (-)Negative

Most trunk release switches are (+)positive, To determine if your trunk release is tripped by a (+) positive or a (-) negative:-
Locate the trunk release wire coming from the back of the trunk release switch. Place one end of your test light to ground, press the "Trunk" button, if the test light illuminates, you have a (+) positive trunk release. If it does not, connect the test light to +12V constant and probe the wire. If the test light illuminates when the button is pressed, then you have a (-) negative trunk release.

How to connect a boot release to an alarm:

ALSO, Depending on which car alarm you have; The Trunk Release Output form the alarm is either (+)Postive OR (-)Negative output.

Connecting a Negative(-) Trunk output:

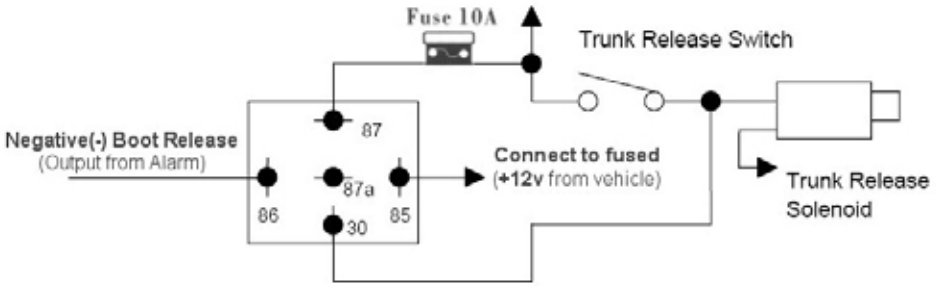

Connecting a Positive(+) Trunk output:

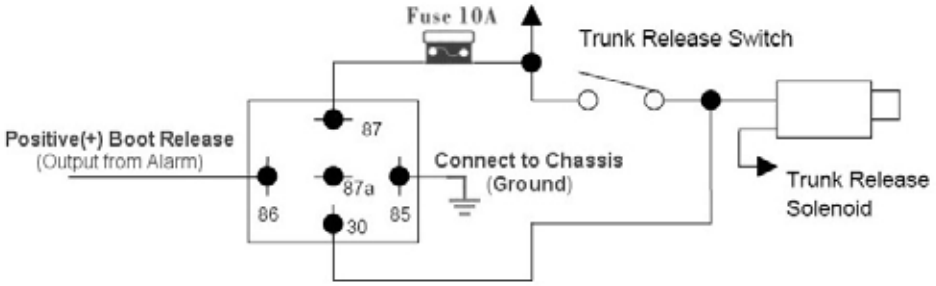

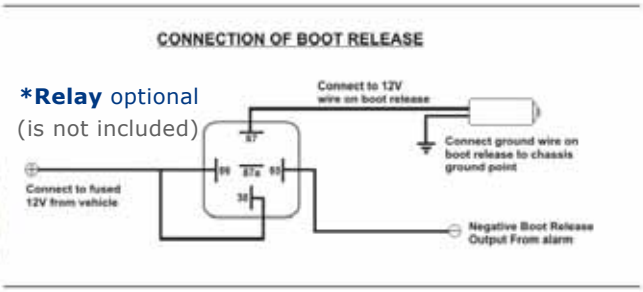

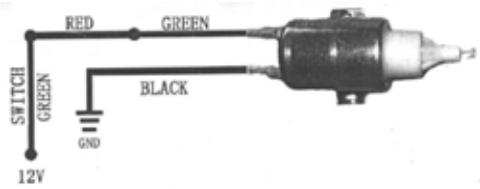

INSTALLATION INSTRUCTION

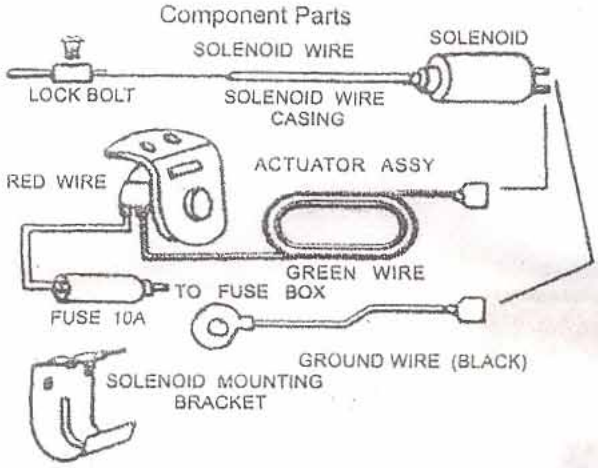

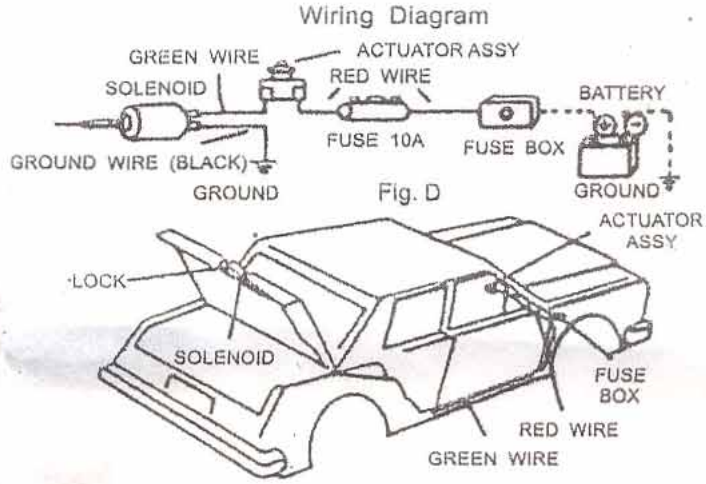

1 Open trunk lid and find lock. Confirm "OPEN"direction of lock lever by moving the lever.

2 Affix hook assembly on the lock lever in "OPEN" direction as shown in FIGURE A.

Fig. A

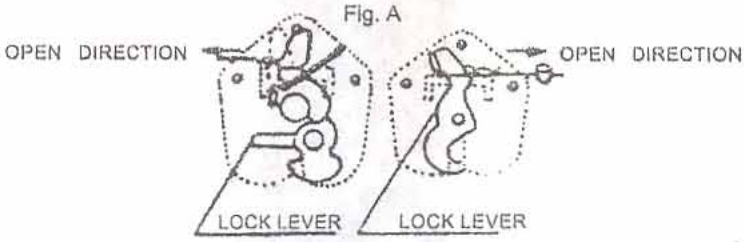

3 Select location to mount solenold.Mount the solenold using solenold mounting bracket alone(FIGURE B) or in combination with the auxillary bracket(FIGURE C).

Fig. B

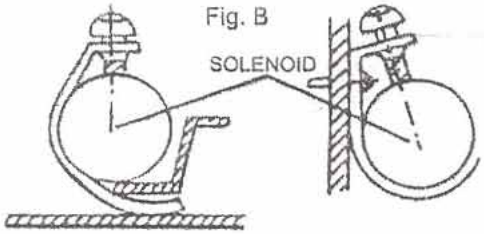

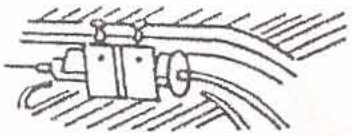

Fig. C

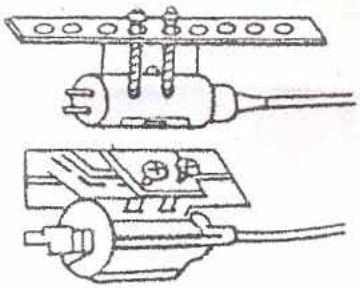

4 Connect hook assembly to solenold wire by using lock boll. Adjustment of length of solenold wire is made by pulling the wire as lingt as possible and then returning it by 1/8 inch (2-3 mm).If solenold wire is longer than necessary,cut it off.
If solenold wire is too long, the trunk release will not operate properly. If the wire is too short,the lock lever will remain at"OPEN"position and trunk fid cannot be shut. Readjust the length of solenold wire.

5 The actuator assembly can be mounted on the dash board or on the center or overhead console as desired. It is sugoested that the actuator assembly be mounted that the actuator assembly be mounted in the glove compartment; by locking the glove compertment, this would preclude others from access to the trunk; also, this will prevent accidental opening of the trunk while traveling at fast speeds.

6 Extemd wiring as shown in FIGURE D.Affix ground wire (black) to one of the bolts on the trunk lock.. Connect green wire between the solenold and one of the terminals on the actuator. The red wire should be connectde between the second terminal on the actuator and the fuse-box or battery.

Boot Release Configurations

This configuration is used when the vehicle's trunk switch operates with a 12-volt signal to the trunk solenoid. Always fuse the 12 Volt supply to the relay

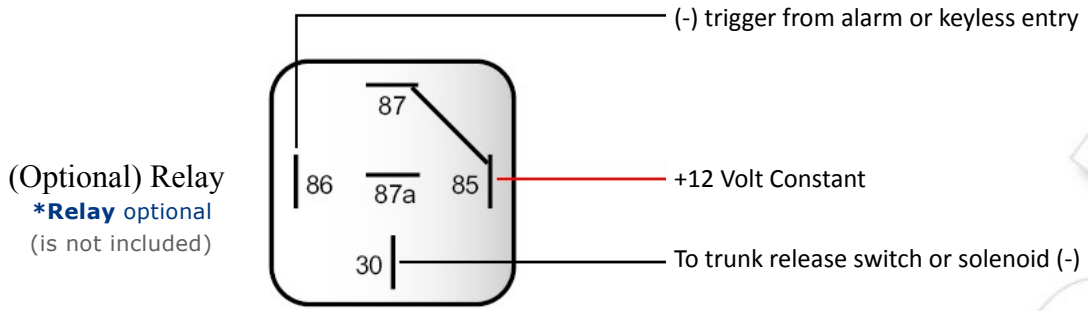

This configuration is used when the vehicle's trunk release switch operates with a high current ground output. The ground output from your unit may not be sufficient to trigger the switch and a relay must be added and wired in this manner. Always fuse the 12 Volt supply to the relay.

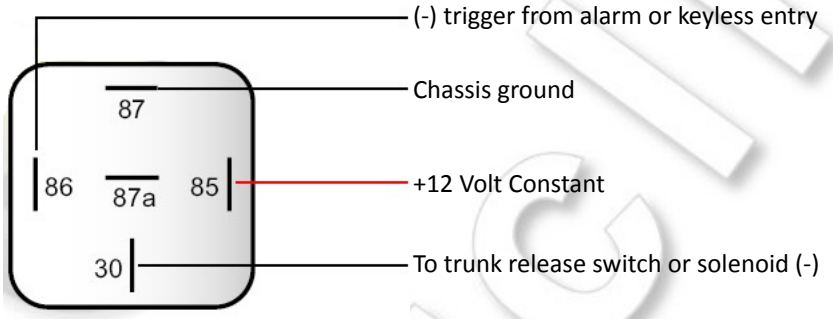

This configuration is used when the output from the vehicle's trunk release switch rests at ground and a 12 Volt pulse can not be applied directly to the wire. Always fuse the 12 Volt supply to the relay.

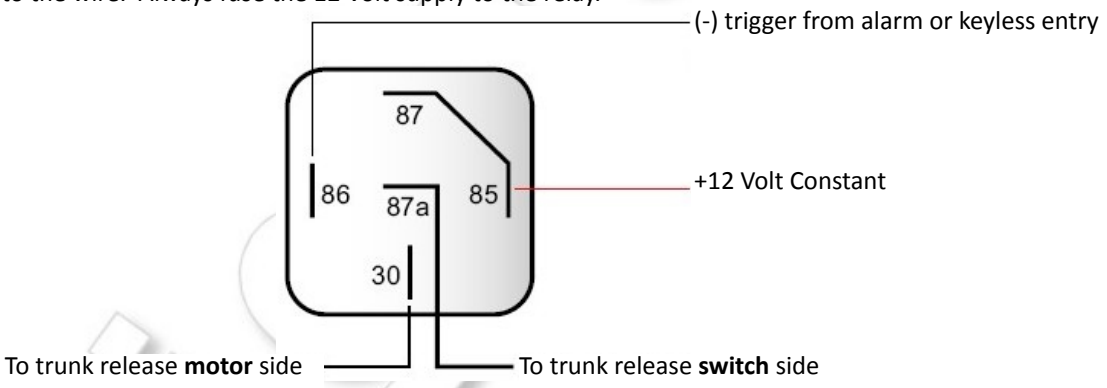

Fitting an electric Boot Release ... http://www.mgf-tf-central.co.uk/iainross/boot.html

Bit of Background

There is an annoying feature of the F/TF, namely to get into the boot you need to use the key. I suppose its a security feature, but its a pain when you want to let a passenger out, and they need to get into the boot. You have to either have a spare key or turn the engine off. To that end, many in the F/TF community have fitted remotely operated electronic boot release kits to their cars. These fall into two types. Those operated with a button from inside the car, and those operated with a remote blipper on the key fob and/or a button inside the car. I fitted the former to Bob, it wasn't hard, and took about an hour and a half.

Fitting Details

The safest way to wire up the switch is shown in the circuit diagram on the left. This means that you a) have to have the ignition on for the switch to operate, and b) have to have the handbrake applied.

The cigar lighter live can be accessed from the transmission tunnel by going in through the lower centre stowage box, which can be easily removed. For the handbrake switch, access can be made by removing the handbrake gaiter (simply unclips) and also through the hole where the ashtray sits. .

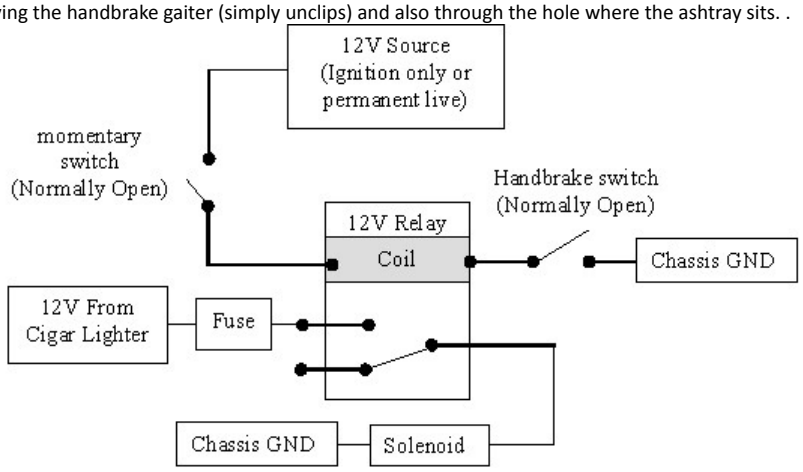

Moving to the work to be done outside the car, first remove one of the light clusters. This is simply a couple of nuts on the inside of the boot. This enables you to open the boot from the inside if you mess things up and neither the key release or your new remote release function properly initially. Its not hard to get the cables to foul in the catch mechanism.

Next put a dust sheet over the engine bay, and into the boot. This stops swarf from drilling and screws that get dropped as they always do, will not fall into the engine compartment.

The wire from the relay that carries the 12V to the solenoid needs to get from the centre tunnel to the boot lid. The easiest way to do this is to thread the wire in from the parcel shelf, under the T-bar, and down to the centre tunnel. Take the other end, and thread it through the rubber grommet in the engine access panel under the parcel shelf carpet. It will appear in the engine bay somewhere behind the boot lit hinge. Tie wrap it to the existing wiring loom and then thread it up the boot lid. This can be fiddly! The way I did it was to thread another wire down from the boot light cavity (obviously removing the boot light) and then pulling the 12V wire up and through.

The solenoid live is then threaded through the catch assembly ready to connect to the solenoid. You can just make out the wire from key operated mechanism heading in to the catch.

Here you can see the run of the solenoid 12V live wire running up the left hand side of the boot lid. I crimped a spade end socket onto the end of it, ready to attach to the solenoid.

This is the first scary bit! You need to position the solenoid and bracket where you want it, and mark up the positions for the holes that the self tapping screws will hold the bracket firmly to the boot lid. Luckily, there is a bit of box section which is suitable, and you can just see the holes in the picture on the left. Be very careful to only go through the box section and not right through to the outer skin of the boot lid! I used a 1/8th inch (3.2 mm) drill bit for the task.

Next, I made up a short earth/return lead for the solenoid. This completes the coil circuit inside the solenoid, giving the current somewhere to go when the solenoid is energised. The ring spade end is screwed onto the bodywork using one of the self tappers that holds the solenoid mount on. I scraped away some of the paint to get a good contact.

In this shot you can see the ready painted solenoid bracket attached to the box section in the boot, with the earth lead in place. Next, it's time to fit the solenoid. This type of solenoid lends itself to having the tapered end poking into the boot catch support housing (on the left). The wire of the solenoid is terminated using the supplied barrel and grub screw at a suitable length. Leave yourself a little extra, as you will need to adjust the length to get the tension just right. This is trial and error and where access through the rear light cluster is important. It will take a bit of adjusting to get the solenoid to open the boot first time, and allow normal operation of the key activated system. Sorry I don't have any photos of this bit yet!!

Next I sprayed up the solenoid, clip and wires, to match the bodywork colour. Nothing like a colour coded boot release!
Lastly, when you are satisfied that all is well, replace the light cluster.
Fingers crossed!!

Here are two different views of the boot release solenoid in situ. I am quite pleased with the result, and happy that now when I pick the wife up from work, when its raining I don't have to get out and open the boot for her. Result methinks!

You are probably wondering why there are no pictures of the button install. That's because I have hidden it away where prying eyes cannot find it. Why make a thief's job easy? Suffice to say there are plenty of places to hide the button inside the cockpit. Use your imagination and avoid the obvious places. However, if you wired it up so it only works when the key is in the ignition, then you can be less worried about its position.